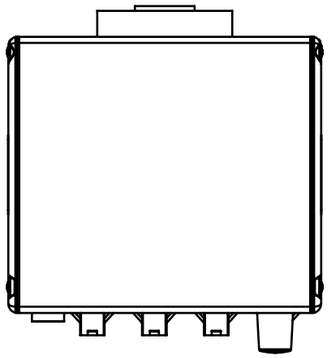

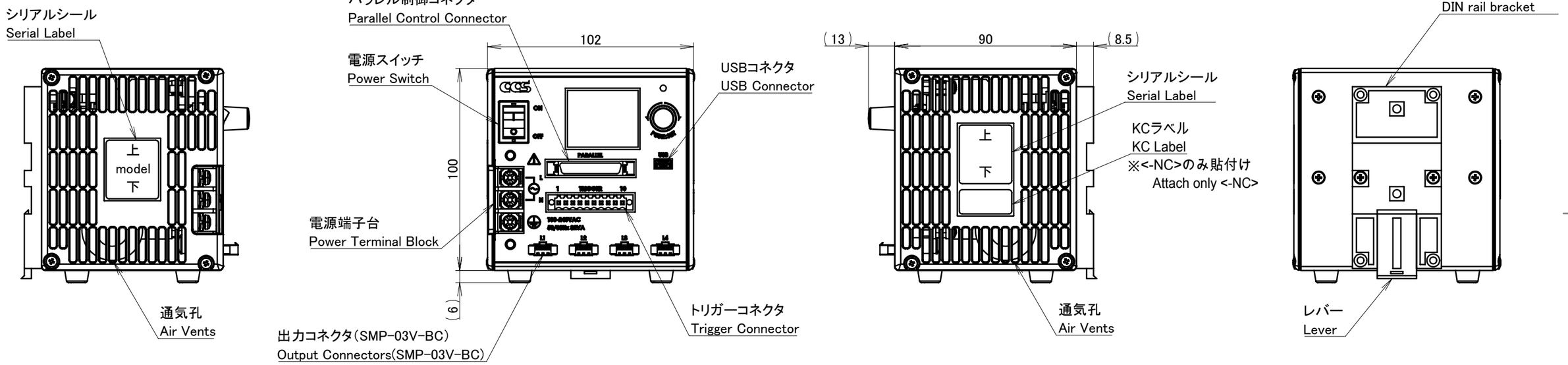

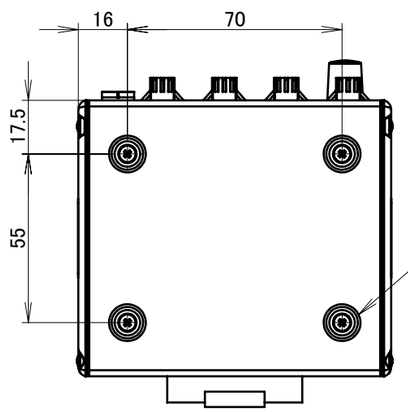

4×M3
底面固定用ネジ穴(挿入深さ8mm以下)
(ゴム脚取付穴と共用)
Bottom Installation Screws Holes(Insertion depth 8mm max.)
(The same holes are used to install rubber feet.)

製品コード_Product code	型式_Model
2001678	PD4-3024A-4-P
2001682	PD4-3024A-4-P-NC

電源入力_Power Input：AC100～240V 50/60Hz 82VA
電源出力_Power Output：DC24V 30W
質量_Weight：0.62kg以下_Max.

UNIT:mm

REVISION	DATE	DESCRIPTION	REVISED
000			

ISSUE DATE	SCALE	APPROVED	NAME
2024/12/06	1:2	H.TAKAGI	PD4-3024A-4-P***
	SHEET SIZE	CHECKED	DRAWING NAME
	A3	K.SAITO	共通外観図_outline
	PROJECTION	DESIGNED T.MATSUSHITA	DRAWING No. / REVISION / SHEET
CCS Inc.		DRAWN T.MATSUSHITA	UA45096-G / 000 / 01/01